EAST WEST UNIVERSITY

Project Report:

Course Code: CSE345

Course Title: Digital Logic Design

Date of Submission: 23/05/25

Group: 07

Submitted by:

Names	ID
Md Moon Rahman Nayem	2022-3-60-210
Md Arafat Hossain	2022-1-60-330
Monsurul Hoque Akib	2022-1-60-088
Anik Sutrodhar	2022-1-60-292

Submitted to:

Course Instructor: Musharrat Khan

Senior Lecturer

Department of CSE

Problem Statement

In this project, we have developed a digital circuit that works as a 4-bit two's complement generator. The circuit takes a 4-bit binary input, labeled A, B, C, and D, and produces a corresponding 4-bit output, represented as w, x, y, and z. The output is the two's complement of the input value.

2's Complementor

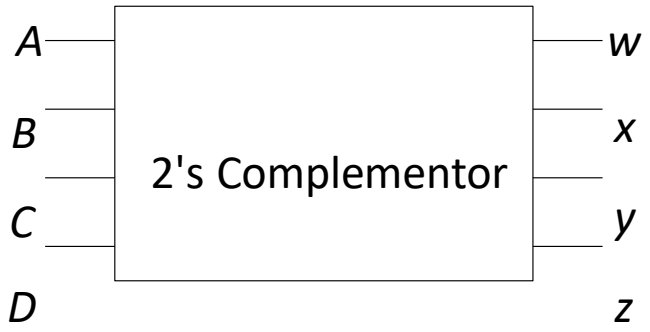

Design Details

To do this project, I will first make a truth table. The outputs in the truth table will show the 4-bit two's complement of the inputs. Next, I will draw K-maps (Karnaugh maps) for each output bit to make the logic simpler. Then, I will use the simplified logic to draw the logic circuit diagram. After that, I will simulate the circuit to see if it works correctly. I will also write two types of Verilog code for the same logic — one using the always block (procedural) and one using assign statements (continuous). I will run simulations for both codes. In the end, I will check that the outputs from the logic diagram, both Verilog codes, and the truth table are all the same. The project will be complete.

Truth Table:

Inputs				Outputs			
A	**B**	**C**	**D**	**W**	**X**	**Y**	**Z**
0	0	0	0	0	0	0	0
0	0	0	1	1	1	1	1
0	0	1	0	1	1	1	0
0	0	1	1	1	1	0	1
0	1	0	0	1	1	0	0
0	1	0	1	1	0	1	1
0	1	1	0	1	0	1	0
0	1	1	1	1	0	0	1
1	0	0	0	1	0	0	0
1	0	0	1	0	1	1	1
1	0	1	0	0	1	1	0
1	0	1	1	0	1	0	1
1	1	0	0	0	1	0	0
1	1	0	1	0	0	1	1
1	1	1	0	0	0	1	0
1	1	1	1	0	0	0	1

K-map:

W:

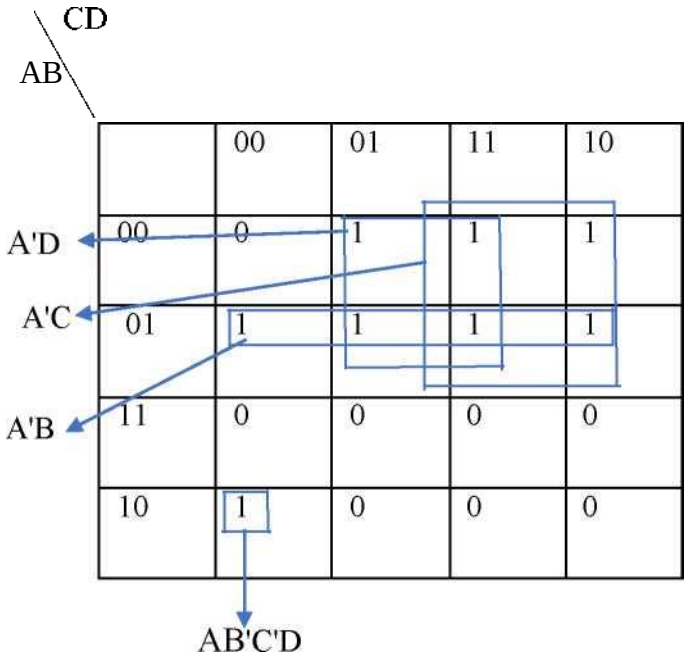

W=A’D+A’C+A’B+AB’C’D’= A’(B+C+D) + A(B+C+D)’= A $\oplus$ (B+C+D)

X:

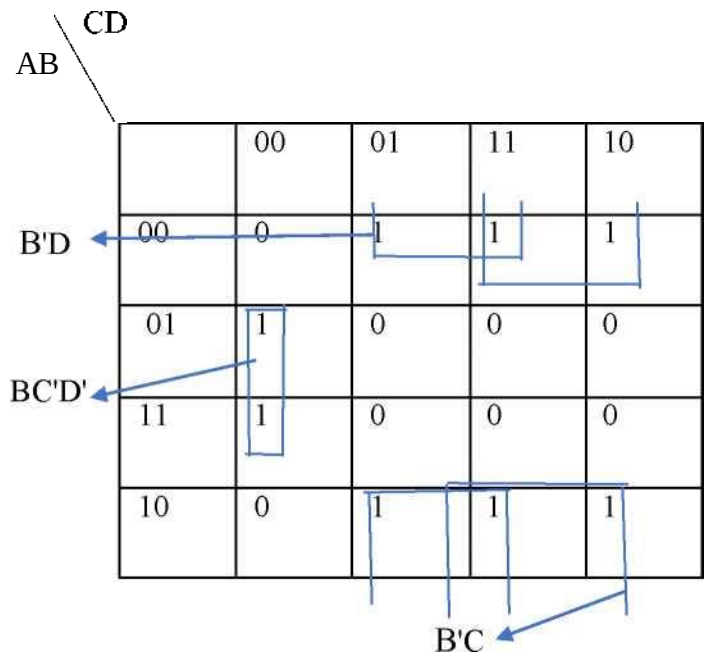

X=BC’D’+B’D+B’C=B(C+D)’+B’(C+D) = B $\oplus$ (C+D)

Y:

AB

	00	01	11	10
00	0	1	0	1
01	0	1	0	1
11	0	1	0	1
10	0	1	0	1

C’D

CD’

Y=C’D+CD’= C $\oplus$ D

Z:

AB \ CD	00	01	11	10
00	0	1	1	0
01	0	1	1	0
11	0	1	1	0
10	0	1	1	0

D

Z = D

Hardware Implementation:

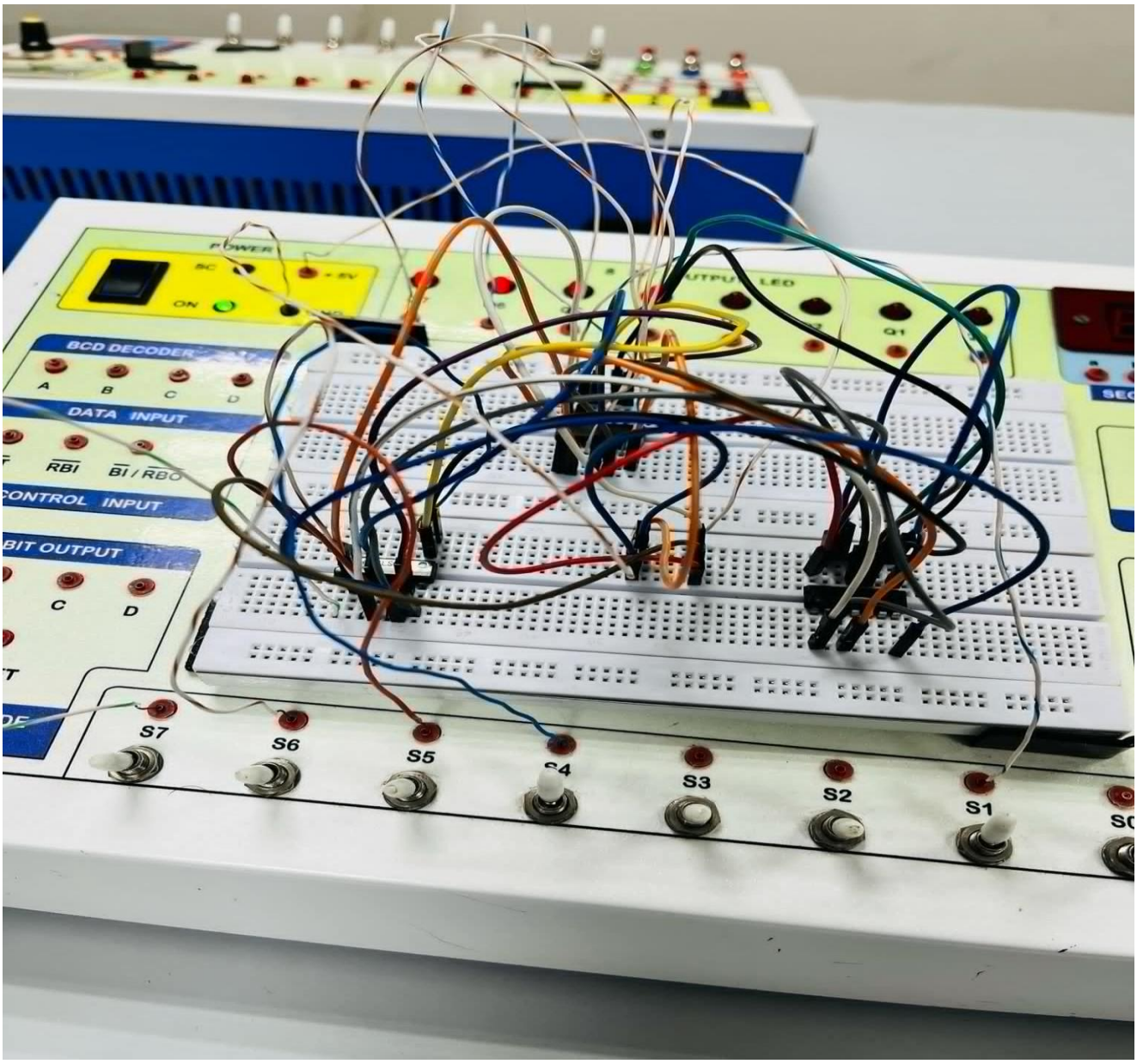

Software Implementation

Circuit Diagram:

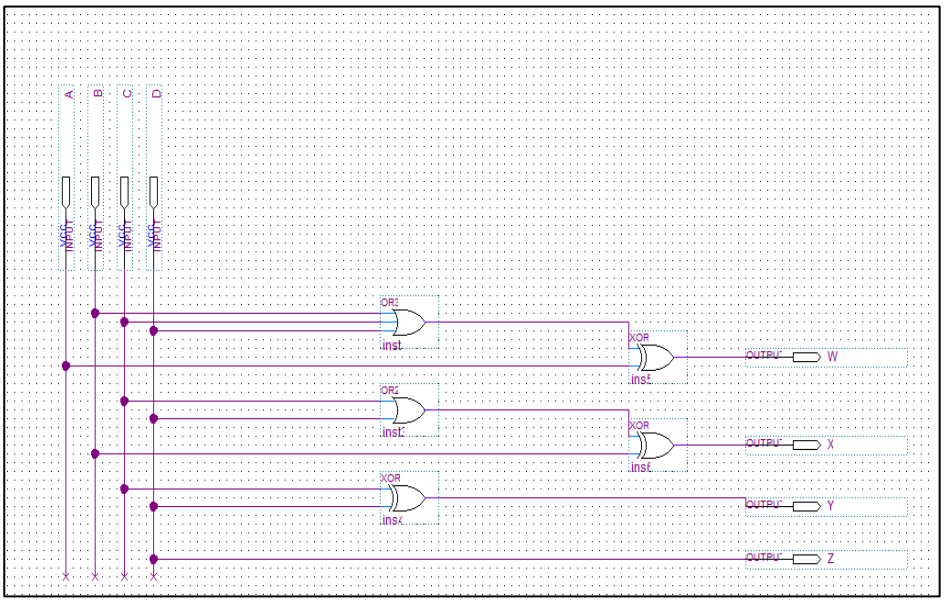

Simulation from Diagram:

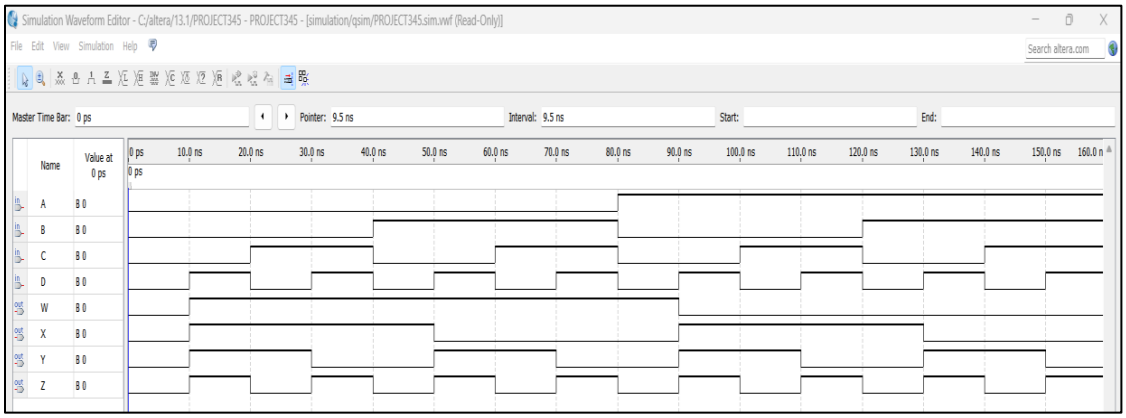

Behavioral Verilog Code - Procedural Model:

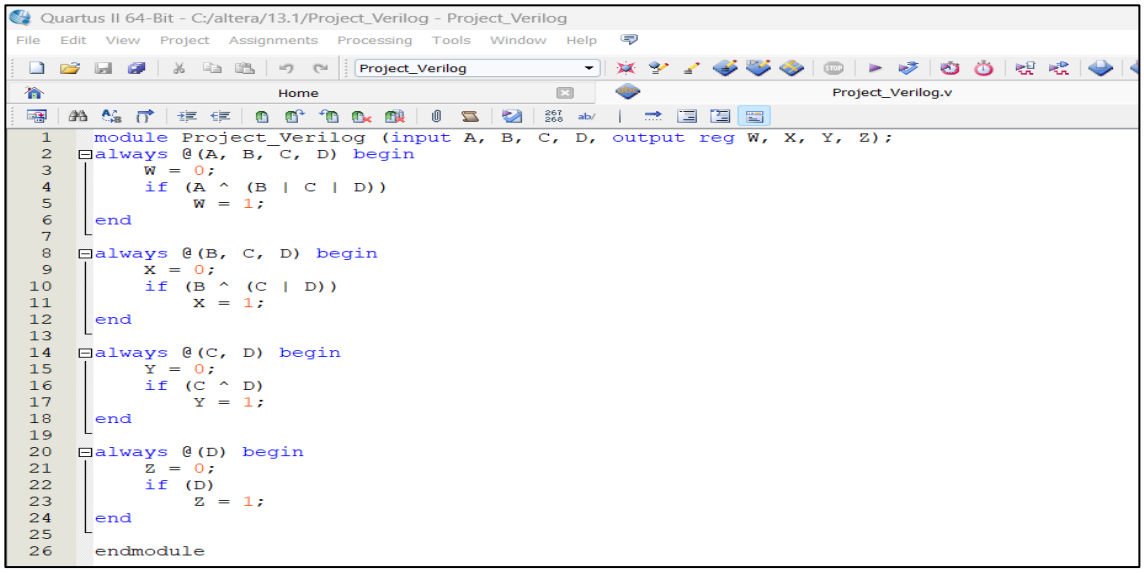


```
module Project_Verilog (input A, B, C, D, output reg W, X, Y, Z);
always @(A, B, C, D) begin
    W = 0;
    if (A ^ (B | C | D))
        W = 1;
end

always @(B, C, D) begin
    X = 0;
    if (B ^ (C | D))
        X = 1;
end

always @(C, D) begin
    Y = 0;
    if (C ^ D)
        Y = 1;
end

always @(D) begin
    Z = 0;
    if (D)
        Z = 1;
end

endmodule
```

Simulation from Verilog Code - Procedural Model:

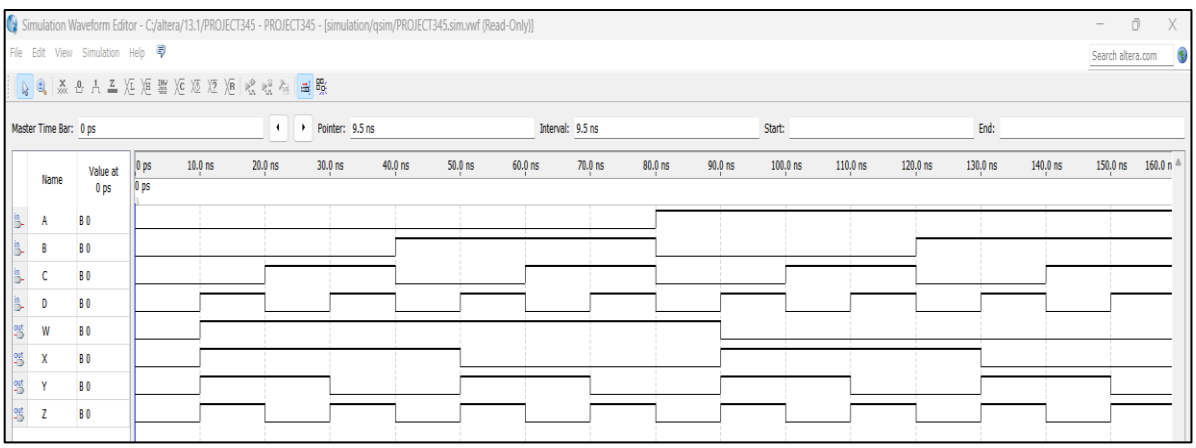

Behavioral Verilog Code - Continuous assign Statement:

```
module VERILOG (input A, B ,C ,D ,output W ,X,Y,Z);

assign W = ((B|C|D)^A);


assign X = ((C|D) ^ B);

assign Y = (C ^ D);

assign Z = ( D);

endmodule
```

Simulation from Verilog Code - Continuous assign Statement:

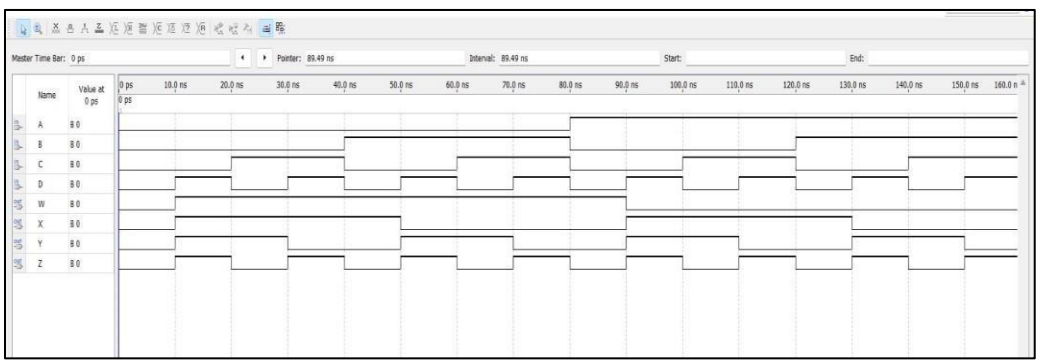

Conclusion

In this project, we successfully implemented a 4-bit two's complement generator using both hardware (logic diagram) and software (Verilog). The logic was simplified using Karnaugh maps, and simulations confirmed the accuracy of our design. Both Verilog models produced the same output as the truth table, validating our implementation. This project helped us understand the fundamentals of two's complement arithmetic and the use of logic design and simulation tools in digital electronics.